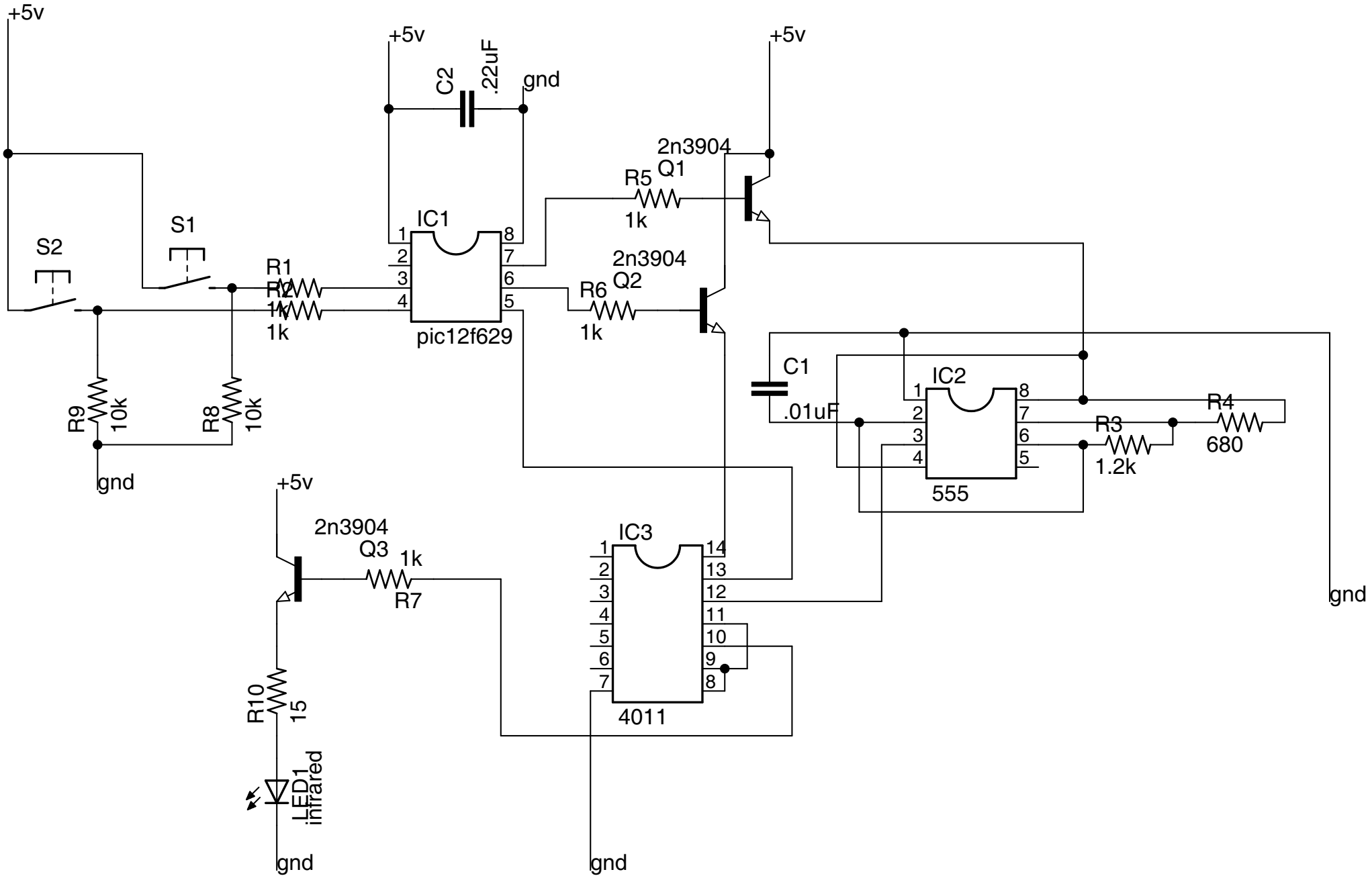Program code and parts list can be found at http://Tech-tut.com